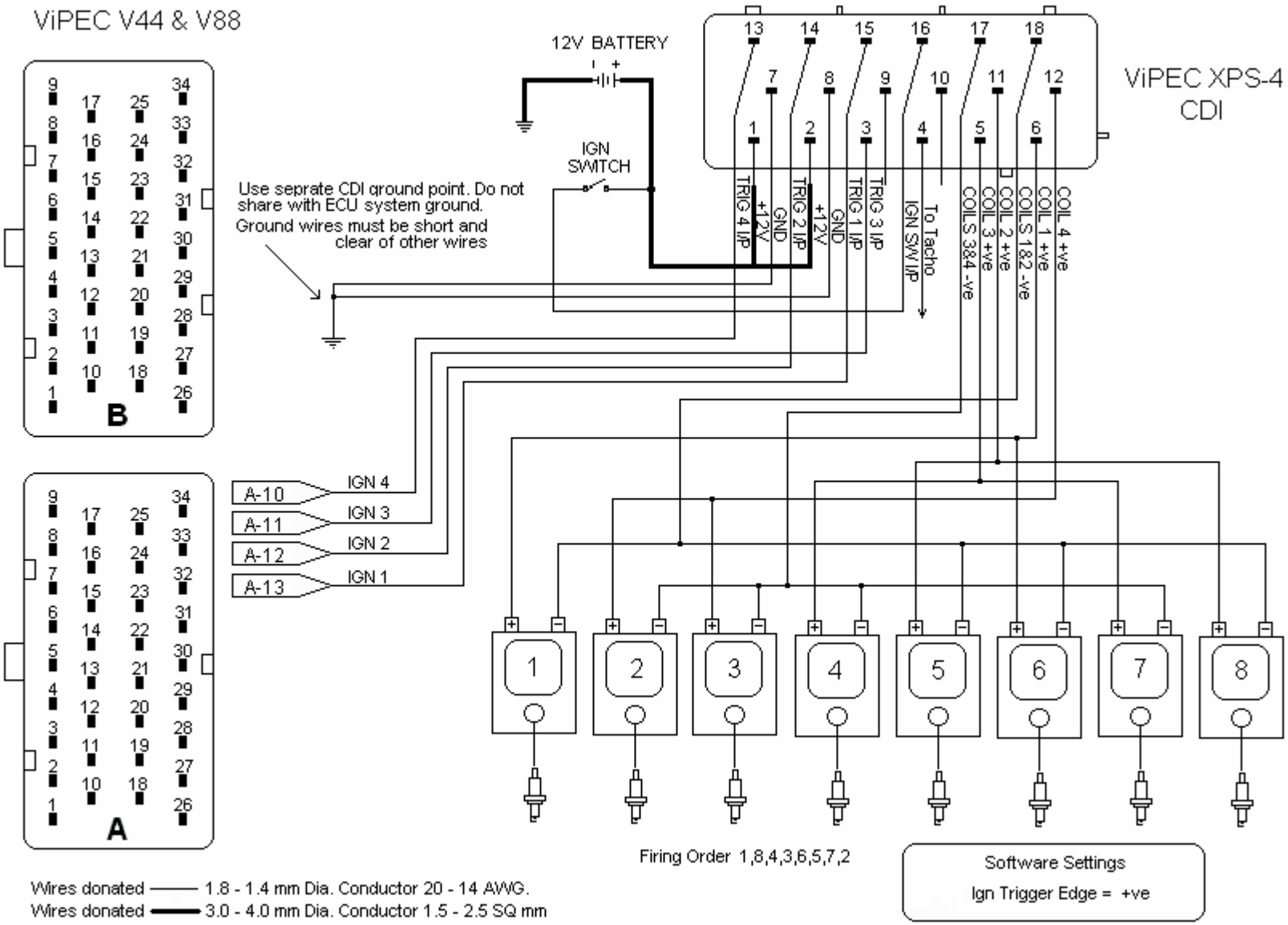
ViPEC V44 & V88
B
A
12V BATTERY
IGN SWITCH
Use seprate CDI ground point. Do not share with ECU system ground.
Ground wires must be short and clear of other wires
ViPEC XPS-4 CDI
TRIG 4 I/P
+12V
GND
TRIG 2 I/P
+12V
GND
TRIG 1 I/P
TRIG 3 I/P
IGN SW I/P
To Tacho
COILS 3&4 -ve
COIL 3 +ve
COIL 2 +ve
COILS 1&2 -ve
COIL 1 +ve
COIL 4 +ve
A-10
A-11
A-12
A-13
IGN 4
IGN 3
IGN 2
IGN 1
Firing Order 1,8,4,3,6,5,7,2
Software Settings
Ign Trigger Edge = +ve
Wires donated —— 1.8 - 1.4 mm Dia. Conductor 20 - 14 AWG.
Wires donated ▬▬ 3.0 - 4.0 mm Dia. Conductor 1.5 - 2.5 SQ mm